Docusign Envelope ID: 3F2B0152-0D33-4555-834A-23D13A85DE12

Flock Safety + CO - Rangely PD

Flock Group Inc.
1170 Howell Mill Rd, Suite 210
Atlanta, GA 30318

MAIN CONTACT:
Will Nobles
will.nobles@flocksafety.com
2058215424

flock safety

flock safety

EXHIBIT A

ORDER FORM

Customer:	CO - Rangely PD	Initial Term:	24 Months
Legal Entity Name:	CO - Rangely PD	Renewal Term:	24 Months
Accounts Payable Email:	thamblin@rangelygovt.com	Payment Terms:	Net 30
Address:	209 E Main St Rangely, Colorado 81648	Billing Frequency:	Annual Plan - Invoiced at First Camera Validation.
		Retention Period:	30 Days

Hardware and Software Products

Annual recurring amounts over subscription term

Item	Cost	Quantity	Total
Flock Safety Platform			**$9,000.00**
Flock Safety Flock OS			
FlockOS ™ - Essentials	Included	1	Included
Flock Safety LPR Products			
Flock Safety Falcon ®	Included	3	Included

Professional Services and One Time Purchases

Item	Cost	Quantity	Total
One Time Fees			
Flock Safety Professional Services			
Professional Services - Existing Infrastructure Implementation Fee	$0.00	1	$0.00
Professional Services - MASH Tested Pole Implementation Fee - Non-Coastal Region	$0.00	2	$0.00

Subtotal Year 1:	$9,000.00
Annual Recurring Subtotal:	$9,000.00
Discounts:	$2,650.00
Estimated Tax:	$0.00
Contract Total:	$18,000.00

The Term for Flock Hardware shall commence upon first installation and validation, except that the Term for any Flock Hardware that requires self-installation shall commence upon execution of the Agreement. In the event a Customer purchases more than one type of Flock Hardware, the earliest Term start date shall control. In the event a Customer purchases software only, the Term shall commence upon execution of the Agreement.

*Taxes shown above are provided as an estimate. Actual taxes are the responsibility of the Customer. This Agreement will automatically renew for successive renewal terms of the greater of one year or the length set forth on the Order Form (each, a "**Renewal Term**") unless either Party gives the other Party notice of non-renewal at least thirty (30) days prior to the end of the then-current term.*

Docusign Envelope ID: 3F2B0152-0D33-4555-834A-23D13A85DE12

Billing Schedule

Billing Schedule	Amount (USD)
Year 1	
At First Camera Validation	$9,000.00
Annual Recurring after Year 1	$9,000.00
Contract Total	$18,000.00

*Tax not included

Discounts

Discounts Applied	Amount (USD)
Flock Safety Platform	$0.00
Flock Safety Add-ons	$0.00
Flock Safety Professional Services	$2,650.00

Product and Services Description

Flock Safety Platform Items	Product Description
FlockOS ™ - Essentials	An integrated public safety platform that detects, centralizes and decodes actionable evidence to increase safety, improve efficiency, and connect the community.
Flock Safety Falcon ®	Law enforcement grade infrastructure-free (solar power + LTE) license plate recognition camera with Vehicle Fingerprint ™ technology (proprietary machine learning software) and real-time alerts for unlimited users.
Professional Services - Existing Infrastructure Implementation Fee	One-time Professional Services engagement. Includes site and safety assessment of existing vertical infrastructure location, camera setup and testing, and shipping and handling in accordance with the Flock Safety Standard Implementation Service Brief.
Professional Services - MASH Tested Pole Implementation Fee - Non-Coastal Region	MASH tested pole that meets DOT crashworthiness requirements. Includes materials, installation, and maintenance.

FlockOS Features & Description

FlockOS Features	Description
Community Network Access	The ability to request direct access to feeds from privately owned Flock Safety Falcon® LPR cameras located in neighborhoods, schools, and businesses in your community, significantly increasing actionable evidence that clears cases.
Unlimited Users	Unlimited users for FlockOS
State Network (License Plate Lookup Only)	Allows agencies to look up license plates on all cameras opted into the Flock Safety network within your state.
Nationwide Network (License Plate Lookup Only)	With the vast Flock Safety sharing network, law enforcement agencies no longer have to rely on just their devices alone. Agencies can leverage a nationwide system boasting 10 billion additional plate reads per month to amplify the potential to collect vital evidence in otherwise dead-end investigations.
Law Enforcement Network Access	The ability to request direct access to evidence detection devices from Law Enforcement agencies outside of your jurisdiction.
Time & Location Based Search	Search full, partial, and temporary plates by time at particular device locations
License Plate Lookup	Look up specific license plate location history captured on Flock devices
Vehicle Fingerprint Search	Search footage using Vehicle Fingerprint™ technology. Access vehicle type, make, color, license plate state, missing / covered plates, and other unique features like bumper stickers, decals, and roof racks.
Insights & Analytics	Reporting tool to help administrators manage their LPR program with device performance data, user and network audits, plate read reports, hot list alert reports, event logs, and outcome reports.
ESRI Based Map Interface	Map-based interface that consolidates all data streams and the locations of each connected asset, enabling greater situational awareness and a common operating picture.
Real-Time NCIC Alerts on Flock ALPR Cameras	Receive automated alerts when vehicles entered into established databases for missing and wanted persons are detected, including the FBI's National Crime Information Center (NCIC) and National Center for Missing & Exploited Children (NCMEC) databases.
Unlimited Custom Hot Lists	Ability to add a suspect's license plate to a custom list and get alerted when it passes by a Flock camera

Docusign Envelope ID: 3F2B0152-0D33-4555-834A-23D13A85DE12

By executing this Order Form, Customer represents and warrants that it has read and agrees to all of the terms and conditions contained in the Master Services Agreement attached.

The Parties have executed this Agreement as of the dates set forth below.

FLOCK GROUP, INC.

By: Signed by: Mark Smith AC5C931454C24F3...

Name: Mark Smith

Title: General Counsel

Date: 12/20/2024

Customer: CO - Rangely PD

By: Signed by: D89B7DFAAECF4D4...

Name: Tirynn Hamblin

Title: Chief of Police

Date: 12/20/2024

PO Number:

Docusign Envelope ID: 3F2B0152-0D33-4555-834A-23D13A85DE12

Master Services Agreement

This Master Services Agreement (this "***Agreement***") is entered into by and between Flock Group Inc. with a place of business at 1170 Howell Mill Road NW Suite 210, Atlanta, GA 30318 ("***Flock***") and the entity identified in the signature block ("***Customer***") (each a "***Party***," and together, the "***Parties***"). This Agreement is effective on the date of mutual execution ("***Effective Date***"). Parties will sign an Order Form ("***Order Form***") which will describe the Flock Services to be performed and the period for performance, attached hereto as **Exhibit A**.

RECITALS

WHEREAS, Flock offers a software and hardware situational awareness solution through Flock's technology platform that upon detection is capable of capturing audio, video, image, and recording data and provide notifications to Customer ("***Notifications***");

WHEREAS, Customer desires access to the Flock Services (defined below) on existing devices, provided by Customer, or Flock provided Flock Hardware (as defined below) in order to create, view, search and archive Footage and receive Notifications, via the Flock Services; and

NOW THEREFORE, in consideration of the mutual promises and covenants set forth herein, the Parties agree as follows:

WHEREAS, Flock desires to provide Customer the Flock Services and any access thereto, subject to the terms and conditions of this Agreement, solely for the awareness, prevention, and prosecution of crime, bona fide investigations and evidence gathering for law enforcement purposes, ("***Permitted Purpose***").

1. DEFINITIONS

Certain capitalized terms, not otherwise defined herein, have the meanings set forth or cross-referenced in this Section 1.

Docusign Envelope ID: 3F2B0152-0D33-4555-834A-23D13A85DE12

1.1 "***Agreement***" means the order form (to be provided as Exhibit A, "Order Form"), these terms and conditions, and any document therein incorporated by reference in section 11.4.

1.2 "***Anonymized Data***" means Customer Data permanently stripped of identifying details and any potential personally identifiable information, by commercially available standards which irreversibly alters data in such a way that a data subject (i.e., individual person or entity) can no longer be identified directly or indirectly.

1.3 "***Authorized End User(s)***" means any individual employees, agents, or contractors of Customer accessing or using the Services, under the rights granted to Customer pursuant to this Agreement.

1.4 "***Customer Data***" means the data, media, and content provided by Customer through the Services. For the avoidance of doubt, the Customer Data will include the Footage.

1.5. "***Customer Hardware***" means the third-party camera owned or provided by Customer and any other physical elements that interact with the Embedded Software and the Web Interface to provide the Services.

1.6 "***Effective Date***" means the date this Agreement is mutually executed (valid and enforceable) by both Parties.

1.7 "***Embedded Software***" means the Flock proprietary software and/or firmware integrated with or installed on the Flock Hardware or Customer Hardware.

1.8 "***Flock Hardware***" means the Flock device(s), which may include the pole, clamps, solar panel, installation components, and any other physical elements that interact with the Embedded Software and the Web Interface, to provide the Flock Services as specifically set forth in the applicable Order Form.

1.9 "***Flock IP***" means the Services, the Embedded Software, and any intellectual property or proprietary information therein or otherwise provided to Customer and/or its Authorized End Users. Flock IP does not include Footage (as defined below).

1.10 "***Flock Services***" means the provision of Flock's software and hardware situational awareness solution, via the Web Interface, for automatic license plate detection, alerts, audio detection, searching image records, video and sharing Footage.

1.11 "***Footage***" means still images, video, audio, and other data captured by the Flock Hardware or Customer Hardware in the course of and provided via the Flock Services.

Docusign Envelope ID: 3F2B0152-0D33-4555-834A-23D13A85DE12

1.12 "***Integration Data***" means any distribution of data from a Customer requested third party integration.

1.13"***Installation Services***" means the services provided by Flock for installation of Flock Services.

1.14 "***Permitted Purpose***" means for legitimate public safety and/or business purpose, including but not limited to the awareness, prevention, and prosecution of crime; investigations; and prevention of commercial harm, to the extent permitted by law.

1.15 "***Retention Period***" means the time period that the Customer Data is stored within the cloud storage, as specified in the applicable Order Form. Flock deletes all Footage on a rolling thirty (30) day basis, except as otherwise stated on the Order Form. Customer shall be responsible for extracting, downloading and archiving Footage from the Flock Services on its own storage devices.

1.16 "***Term***" means the date, unless otherwise stated in the Order Form, upon which the cameras are validated by both Parties as operational.

1.17 "***Web Interface***" means the website(s) or application(s) through which Customer and its Authorized End Users can access the Services.

2. SERVICES AND SUPPORT

2.1 **Provision of Access.** Flock hereby grants to Customer a non-exclusive, non-transferable right to access the features and functions of the Flock Services via the Web Interface during the Term, solely for the Authorized End Users. The Footage will be available for Authorized End Users to access and download via the Web Interface for the Retention Period. Authorized End Users will be required to sign up for an account and select a password and username ("***User ID***"). Customer shall be responsible for all acts and omissions of Authorized End Users. Customer shall undertake reasonable efforts to make all Authorized End Users aware of all applicable provisions of this Agreement and shall cause Authorized End Users to comply with such provisions. Flock may use the services of one or more third parties to deliver any part of the Flock Services, (such as using a third party to host the Web Interface for cloud storage or a cell phone provider for wireless cellular coverage).

Docusign Envelope ID: 3F2B0152-0D33-4555-834A-23D13A85DE12

2.2 **Embedded Software License.** Flock grants Customer a limited, non-exclusive, non-transferable, non-sublicensable (except to the Authorized End Users), revocable right to use the Embedded Software as it pertains to Flock Services, solely as necessary for Customer to use the Flock Services.

2.3 **Support Services.** Flock shall monitor the Flock Services, and any applicable device health, in order to improve performance and functionality. Flock will use commercially reasonable efforts to respond to requests for support within seventy-two (72) hours. Flock will provide Customer with reasonable technical and on-site support and maintenance services in-person, via phone or by email at support@flocksafety.com (such services collectively referred to as ***"Support Services"***).

2.4 **Updates to Platform.** Flock may make any updates to system or platform that it deems necessary or useful to (i) maintain or enhance the quality or delivery of Flock's products or services to its agencies, the competitive strength of, or market for, Flock's products or services, such platform or system's cost efficiency or performance, or (ii) to comply with applicable law. Parties understand that such updates are necessary from time to time and will not diminish the quality of the services or materially change any terms or conditions within this Agreement.

2.5 **Service Interruption.** Services may be interrupted in the event that: (a) Flock's provision of the Services to Customer or any Authorized End User is prohibited by applicable law; (b) any third-party services required for Services are interrupted; (c) if Services are being used for malicious, unlawful, or otherwise unauthorized use; (d) there is a threat or attack on any of the Flock IP by a third party; or (e) scheduled or emergency maintenance ("***Service Interruption***"). Flock will make commercially reasonable efforts to provide written notice of any Service Interruption to Customer, to provide updates, and to resume providing access to Flock Services as soon as reasonably possible after the event giving rise to the Service Interruption is cured. Flock will have no liability for any damage, liabilities, losses (including any loss of data or profits), or any other consequences that Customer or any Authorized End User may incur as a result of a Service Interruption. To the extent that the Service Interruption is not caused by Customer's direct actions or by the actions of parties associated with the Customer, the time will be tolled by the duration of the Service Interruption (for any continuous suspension lasting at least one full day). For example, in the event of a Service Interruption lasting five (5) continuous days, Customer will receive a credit for five (5) free days at the end of the Term.

Docusign Envelope ID: 3F2B0152-0D33-4555-834A-23D13A85DE12

2.6 **Service Suspension.** Flock may temporarily suspend Customer's and any Authorized End User's access to any portion or all of the Flock IP or Flock Service if (a) there is a threat or attack on any of the Flock IP by Customer; (b) Customer's or any Authorized End User's use of the Flock IP disrupts or poses a security risk to the Flock IP or any other customer or vendor of Flock; (c) Customer or any Authorized End User is/are using the Flock IP for fraudulent or illegal activities; (d) Customer has violated any term of this provision, including, but not limited to, utilizing Flock Services for anything other than the Permitted Purpose; or (e) any unauthorized access to Flock Services through Customer's account ("***Service Suspension***"). Customer shall not be entitled to any remedy for the Service Suspension period, including any reimbursement, tolling, or credit. If the Service Suspension was not caused by Customer, the Term will be tolled by the duration of the Service Suspension.

2.7 **Hazardous Conditions.** Flock Services do not contemplate hazardous materials, or other hazardous conditions, including, without limit, asbestos, lead, or toxic or flammable substances. In the event any such hazardous materials are discovered in the designated locations in which Flock is to perform services under this Agreement, Flock shall have the right to cease work immediately.

3. CUSTOMER OBLIGATIONS

3.1 **Customer Obligations.** Flock will assist Customer Authorized End Users in the creation of a User ID. Authorized End Users agree to provide Flock with accurate, complete, and updated registration information. Authorized End Users may not select as their User ID, a name that they do not have the right to use, or any other name with the intent of impersonation. Customer and Authorized End Users may not transfer their account to anyone else without prior written permission of Flock. Authorized End Users shall not share their account username or password information and must protect the security of the username and password. Unless otherwise stated and defined in this Agreement, Customer shall not designate Authorized End Users for persons who are not officers, employees, or agents of Customer. Authorized End Users shall only use Customer-issued email addresses for the creation of their User ID. Customer is responsible for any Authorized End User activity associated with its account. Customer shall ensure that Customer provides Flock with up-to-date contact information at all times during the Term of this Agreement. Customer shall be responsible for obtaining and maintaining any equipment and

Docusign Envelope ID: 3F2B0152-0D33-4555-834A-23D13A85DE12

ancillary services needed to connect to, access or otherwise use the Flock Services (e.g., laptops, internet connection, mobile devices, etc.). Customer shall (at its own expense) provide Flock with reasonable access and use of Customer facilities and Customer personnel in order to enable Flock to perform Services (such obligations of Customer are collectively defined as ***"Customer Obligations"***).

3.2 **Customer Representations and Warranties.** Customer represents, covenants, and warrants that Customer shall use Flock Services only in compliance with this Agreement and all applicable laws and regulations, including but not limited to any laws relating to the recording or sharing of data, video, photo, or audio content.

4. DATA USE AND LICENSING

4.1 **Customer Data.** As between Flock and Customer, all right, title and interest in the Customer Data, belong to and are retained solely by Customer. Customer hereby grants to Flock a limited, non-exclusive, royalty-free, irrevocable, worldwide license to use the Customer Data and perform all acts as may be necessary for Flock to provide the Flock Services to Customer. Flock does not own and shall not sell Customer Data.

4.2 **Customer Generated Data.** Flock may provide Customer with the opportunity to post, upload, display, publish, distribute, transmit, broadcast, or otherwise make available, messages, text, illustrations, files, images, graphics, photos, comments, sounds, music, videos, information, content, ratings, reviews, data, questions, suggestions, or other information or materials produced by Customer (**"*Customer Generated Data*"**). Customer shall retain whatever legally cognizable right, title, and interest in Customer Generated Data. Customer understands and acknowledges that Flock has no obligation to monitor or enforce Customer's intellectual property rights of Customer Generated Data. Customer grants Flock a non-exclusive, irrevocable, worldwide, royalty-free, license to use the Customer Generated Data for the purpose of providing Flock Services. Flock does not own and shall not sell Customer Generated Data.

4.3 **Anonymized Data.** Flock shall have the right to collect, analyze, and anonymize Customer Data and Customer Generated Data to the extent such anonymization renders the data non-identifiable to create Anonymized Data to use and perform the Services and related systems and technologies, including the training of machine learning algorithms. Customer hereby grants Flock a non-exclusive, worldwide, perpetual, royalty-free right to use and distribute such

Docusign Envelope ID: 3F2B0152-0D33-4555-834A-23D13A85DE12

Anonymized Data to improve and enhance the Services and for other development, diagnostic and corrective purposes, and other Flock offerings. Parties understand that the aforementioned license is required for continuity of Services. Flock does not own and shall not sell Anonymized Data.

4.4 **Data Distribution**. Customer may, upon request, choose to integrate Flock Services with a third party to either distribute Integration Data or Customer Data (such third party, "Recipient"). Upon such request, Customer hereby grants to Flock a non-exclusive, non-transferable, royalty-free, perpetual license to access, share, view, record, duplicate, store, save, reproduce, modify, display, and distribute Customer Data and/or Integration Data, as required by the requested distribution. Customer acknowledges that such data may be viewed, recorded, duplicated, stored, saved, reproduced, modified, displayed, distributed, and retained by Recipient for a period longer than Flock's standard retention period and hereby provides consent to such retention period. Unless expressly listed in the Order Form, the provision, access, or use of any Application Programming Interfaces ("APIs") is not included under this Agreement. Any rights, licenses, or obligations related to APIs shall be governed solely by the terms set forth in the Order Form or a separate agreement between the parties.

5. CONFIDENTIALITY; DISCLOSURES

5.1 **Confidentiality.** To the extent required by any applicable public records requests, each Party (the "***Receiving Party***") understands that the other Party (the "***Disclosing Party***") has disclosed or may disclose business, technical or financial information relating to the Disclosing Party's business (hereinafter referred to as "***Proprietary Information***" of the Disclosing Party). Proprietary Information of Flock includes non-public information provided by the Disclosing Party to the Receiving Party regarding features, functionality and performance of this Agreement. Proprietary Information of Customer includes non-public data provided by Customer to Flock or collected by Flock via Flock Services, which includes but is not limited to geolocation information and environmental data collected by sensors. The Receiving Party agrees: (i) to take the same security precautions to protect against disclosure or unauthorized use of such Proprietary Information that the Party takes with its own proprietary information, but in no event less than commercially reasonable precautions, and (ii) not to use (except in performance of the Services or as otherwise permitted herein) or divulge to any third person any

Docusign Envelope ID: 3F2B0152-0D33-4555-834A-23D13A85DE12

such Proprietary Information. The Disclosing Party agrees that the foregoing shall not apply with respect to any information that the Receiving Party can document (a) is or becomes generally available to the public; or (b) was in its possession or known by it prior to receipt from the Disclosing Party; or (c) was rightfully disclosed to it without restriction by a third party; or (d) was independently developed without use of any Proprietary Information of the Disclosing Party. Nothing in this Agreement will prevent the Receiving Party from disclosing the Proprietary Information pursuant to any judicial or governmental order, provided that the Receiving Party gives the Disclosing Party reasonable prior notice of such disclosure to contest such order. At the termination of this Agreement, all Proprietary Information will be returned to the Disclosing Party, destroyed or erased (if recorded on an erasable storage medium), together with any copies thereof, when no longer needed for the purposes above, or upon request from the Disclosing Party, and in any case upon termination of the Agreement. Notwithstanding any termination, all confidentiality obligations of Proprietary Information that is trade secret shall continue in perpetuity or until such information is no longer trade secret.

5.2 **Usage Restrictions on Flock IP.** Flock and its licensors retain all right, title and interest in and to the Flock IP and its components, and Customer acknowledges that it neither owns nor acquires any additional rights in and to the foregoing not expressly granted by this Agreement. Customer further acknowledges that Flock retains the right to use the foregoing for any purpose in Flock's sole discretion. Customer and Authorized End Users shall not: (i) directly or indirectly, reverse engineer, decompile, disassemble, or otherwise attempt to discover, or recreate the source code, object code or underlying structure, ideas or algorithm of the Flock Services or any software provided hereunder; modify, translate, or create derivative works based on the Flock Services or any software provided hereunder, (ii) attempt to modify, alter, tamper with or repair any of the Flock IP, or attempt to create any derivative product from any of the foregoing; (iii) interfere or attempt to interfere in any manner with the functionality or proper working of any of the Flock IP; (iv) remove, obscure, or alter any notice of any intellectual property or proprietary right appearing on or contained within the Flock Services or Flock IP; (v) use the Flock Services for anything other than the Permitted Purpose; or (vi) assign, sublicense, sell, resell, lease, rent, or otherwise transfer, convey, pledge as security, or otherwise encumber, Customer's rights. There are no implied rights.

Docusign Envelope ID: 3F2B0152-0D33-4555-834A-23D13A85DE12

5.3 **Disclosure of Footage.** Subject to and during the Retention Period, Flock may access, use, preserve and/or disclose the Footage to law enforcement authorities, government officials, and/or third parties, if legally required to do so or if Flock has a good faith belief that such access, use, preservation or disclosure is reasonably necessary to comply with a legal process, enforce this Agreement, or detect, prevent or otherwise address security, privacy, fraud or technical issues, or emergency situations.

6. PAYMENT OF FEES

6.1 **Billing and Payment of Fees**. Customer shall pay the fees set forth in the applicable Order Form based on the billing structure and payment terms as indicated in the Order Form. To the extent the Order Form is silent, Customer shall pay all invoices net thirty (30) days from the date of receipt. If Customer believes that Flock has billed Customer incorrectly, Customer must contact Flock no later than thirty (30) days after the closing date on the first invoice in which the error or problem appeared to receive an adjustment or credit. Customer acknowledges and agrees that a failure to contact Flock within this period will serve as a waiver of any claim. If any undisputed fee is more than thirty (30) days overdue, Flock may, without limiting its other rights and remedies, suspend delivery of its service until such undisputed invoice is paid in full. Flock shall provide at least thirty (30) days' prior written notice to Customer of the payment delinquency before exercising any suspension right.

6.2 **Notice of Changes to Fees.** In the event of any changes to fees, Flock shall provide Customer with sixty (60) days notice (email sufficient) prior to the end of the Initial Term or Renewal Term (as applicable). Any such changes to fees shall only impact subsequent Renewal Terms.

6.3 **Taxes.** To the extent Customer is not a tax exempt entity, Customer is responsible for all taxes, levies, or duties, excluding only taxes based on Flock's net income, imposed by taxing authorities associated with the order. If Flock has the legal obligation to pay or collect taxes, including amount subsequently assessed by a taxing authority, for which Customer is responsible, the appropriate amount shall be invoice to and paid by Customer unless Customer provides Flock a legally sufficient tax exemption certificate and Flock shall not charge Customer any taxes from which it is exempt. If any deduction or withholding is required by law, Customer shall notify Flock and shall pay Flock any additional amounts necessary to ensure that the net

Docusign Envelope ID: 3F2B0152-0D33-4555-834A-23D13A85DE12

amount that Flock receives, after any deduction and withholding, equals the amount Flock would have received if no deduction or withholding had been required.

7. TERM AND TERMINATION

7.1 **Term.** The initial term of this Agreement shall be for the period of time set forth on the Order Form (the "***Term***"). Unless otherwise indicated on the Order Form, the Term shall commence upon first installation of Flock Hardware, as applicable. Following the Term, unless otherwise indicated on the Order Form, this Agreement will automatically renew for successive renewal terms of the greater of one year or the length set forth on the Order Form (each, a "***Renewal Term***") unless either Party gives the other Party notice of non-renewal at least thirty (30) days prior to the end of the then-current term.

7.2 **Termination.** Upon termination or expiration of this Agreement, Flock will remove any applicable Flock Hardware at a commercially reasonable time period. In the event of any material breach of this Agreement, the non-breaching Party may terminate this Agreement prior to the end of the Term by giving thirty (30) days prior written notice to the breaching Party; provided, however, that this Agreement will not terminate if the breaching Party has cured the breach prior to the expiration of such thirty (30) day period ("***Cure Period***"). Either Party may terminate this Agreement (i) upon the institution by or against the other Party of insolvency, receivership or bankruptcy proceedings, (ii) upon the other Party's making an assignment for the benefit of creditors, or (iii) upon the other Party's dissolution or ceasing to do business. In the event of a material breach by Flock, and Flock is unable to cure within the ***Cure Period***, Flock will refund Customer a pro-rata portion of the pre-paid fees for Services not received due to such termination.

7.3 **Survival**. The following Sections will survive termination: 1, 3, 5, 6, 7, 8.3, 8.4, 9, 10.1 and 11.6.

8. REMEDY FOR DEFECT; WARRANTY AND DISCLAIMER

8.1 **Manufacturer Defect.** Upon a malfunction or failure of Flock Hardware or Embedded Software (a **"*Defect***"), Customer must notify Flock's technical support team. In the event of a Defect, Flock shall make a commercially reasonable attempt to repair or replace the defective Flock Hardware at no additional cost to the Customer. Flock reserves the right, in its sole

Docusign Envelope ID: 3F2B0152-0D33-4555-834A-23D13A85DE12

discretion, to repair or replace such Defect, provided that Flock shall conduct inspection or testing within a commercially reasonable time, but no longer than seven (7) business days after Customer gives notice to Flock.

8.2 **Replacements.** In the event that Flock Hardware is lost, stolen, or damaged, Customer may request a replacement of Flock Hardware at a fee according to the reinstall fee schedule (https://www.flocksafety.com/reinstall-fee-schedule). In the event that Customer chooses not to replace lost, damaged, or stolen Flock Hardware, Customer understands and agrees that Flock is not liable for any resulting impact to Flock Service, nor shall Customer receive a refund for the lost, damaged, or stolen Flock Hardware.

8.3 **Warranty.** Flock shall use reasonable efforts consistent with prevailing industry standards to maintain the Services in a manner which minimizes errors and interruptions in the Services and shall perform the Installation Services in a professional and workmanlike manner. Services may be temporarily unavailable for scheduled maintenance or for unscheduled emergency maintenance, either by Flock or by third-party providers, or because of other causes beyond Flock's reasonable control, but Flock shall use reasonable efforts to provide advance notice in writing or by e-mail of any scheduled service disruption.

8.4 **Disclaimer.** THE REMEDY DESCRIBED IN SECTION 8.1 ABOVE IS CUSTOMER'S SOLE REMEDY, AND FLOCK'S SOLE LIABILITY, WITH RESPECT TO DEFECTS. FLOCK IS NOT LIABLE FOR ANY DAMAGES OR ISSUES ARISING FROM THIRD-PARTY DISTRIBUTIONS REQUESTED BY CUSTOMER. AFOREMENTIONED DISTRIBUTION IS AT CUSTOMER'S OWN RISK. FLOCK DOES NOT WARRANT THAT THE SERVICES WILL BE UNINTERRUPTED OR ERROR FREE; NOR DOES IT MAKE ANY WARRANTY AS TO THE RESULTS THAT MAY BE OBTAINED FROM USE OF THE SERVICES. EXCEPT AS EXPRESSLY SET FORTH IN THIS SECTION, THE SERVICES ARE PROVIDED "AS IS" AND FLOCK DISCLAIMS ALL WARRANTIES, EXPRESS OR IMPLIED, INCLUDING, BUT NOT LIMITED TO, IMPLIED WARRANTIES OF MERCHANTABILITY AND FITNESS FOR A PARTICULAR PURPOSE. THIS DISCLAIMER ONLY APPLIES TO THE EXTENT ALLOWED BY THE GOVERNING LAW OF THE STATE MENTIONED IN SECTION 11.6.

8.5 **Insurance.** Flock will maintain commercial general liability policies to be provided as Exhibit B.

Docusign Envelope ID: 3F2B0152-0D33-4555-834A-23D13A85DE12

8.6 **Force Majeure.** Parties are not responsible or liable for any delays or failures in performance from any cause beyond their control, including, but not limited to acts of God, changes to law or regulations, embargoes, war, terrorist acts, pandemics (including the spread of variants), issues of national security, acts or omissions of third-party technology providers, riots, fires, earthquakes, floods, power blackouts, strikes, supply chain shortages of equipment or supplies, financial institution crisis, weather conditions or acts of hackers, internet service providers or any other third party acts or omissions.

9. LIMITATION OF LIABILITY; INDEMNITY

9.1 **Limitation of Liability.** NOTWITHSTANDING ANYTHING TO THE CONTRARY, FLOCK, ITS OFFICERS, AFFILIATES, REPRESENTATIVES, CONTRACTORS AND EMPLOYEES SHALL NOT BE RESPONSIBLE OR LIABLE WITH RESPECT TO ANY SUBJECT MATTER OF THIS AGREEMENT OR TERMS AND CONDITIONS RELATED THERETO UNDER ANY CONTRACT, NEGLIGENCE, STRICT LIABILITY, PRODUCT LIABILITY, OR OTHER THEORY: (A) FOR LOSS OF REVENUE, BUSINESS OR BUSINESS INTERRUPTION; (B) INCOMPLETE, CORRUPT, OR INACCURATE DATA; (C) COST OF PROCUREMENT OF SUBSTITUTE GOODS, SERVICES OR TECHNOLOGY; (D) FOR ANY INDIRECT, EXEMPLARY, INCIDENTAL, SPECIAL OR CONSEQUENTIAL DAMAGES; (E) FOR ANY MATTER BEYOND FLOCK'S ACTUAL KNOWLEDGE OR REASONABLE CONTROL INCLUDING REPEAT CRIMINAL ACTIVITY OR INABILITY TO CAPTURE FOOTAGE; OR (F) FOR ANY AMOUNTS THAT, TOGETHER WITH AMOUNTS ASSOCIATED WITH ALL OTHER CLAIMS, EXCEED THE FEES PAID AND/OR PAYABLE BY CUSTOMER TO FLOCK FOR THE SERVICES UNDER THIS AGREEMENT IN THE TWELVE (12) MONTHS PRIOR TO THE ACT OR OMISSION THAT GAVE RISE TO THE LIABILITY, IN EACH CASE, WHETHER OR NOT FLOCK HAS BEEN ADVISED OF THE POSSIBILITY OF SUCH DAMAGES. THIS LIMITATION OF LIABILITY OF SECTION ONLY APPLIES TO THE EXTENT ALLOWED BY THE GOVERNING LAW OF THE STATE REFERENCED IN SECTION 11.6. NOTWITHSTANDING ANYTHING TO THE CONTRARY, THE FOREGOING LIMITATIONS OF LIABILITY SHALL NOT APPLY (I) IN THE EVENT OF GROSS

Docusign Envelope ID: 3F2B0152-0D33-4555-834A-23D13A85DE12

NEGLIGENCE OR WILLFUL MISCONDUCT, OR (II) INDEMNIFICATION OBLIGATIONS.

9.2 **Responsibility.** Each Party to this Agreement shall assume the responsibility and liability for the acts and omissions of its own employees, officers, or agents, in connection with the performance of their official duties under this Agreement. Each Party to this Agreement shall be liable for the torts of its own officers, agents, or employees.

9.3 **Flock Indemnity.** Flock shall indemnify and hold harmless Customer, its agents and employees, from liability of any kind, including claims, costs (including defense) and expenses, on account of: (i) any copyrighted material, patented or unpatented invention, articles, device or appliance manufactured or used in the performance of this Agreement; or (ii) any damage or injury to property or person directly caused by Flock's installation of Flock Hardware, except for where such damage or injury was caused solely by the negligence of the Customer or its agents, officers or employees. Flock's performance of this indemnity obligation shall not exceed the fees paid and/or payable for the services rendered under this Agreement in the preceding twelve (12) months.

10. INSTALLATION SERVICES AND OBLIGATIONS

10.1 **Ownership of Hardware**. Flock Hardware is owned and shall remain the exclusive property of Flock. Title to any Flock Hardware shall not pass to Customer upon execution of this Agreement, except as otherwise specifically set forth in this Agreement. Except as otherwise expressly stated in this Agreement, Customer is not permitted to remove, reposition, re-install, tamper with, alter, adjust or otherwise take possession or control of Flock Hardware. Customer agrees and understands that in the event Customer is found to engage in any of the foregoing restricted actions, all warranties herein shall be null and void, and this Agreement shall be subject to immediate termination for material breach by Customer. Customer shall not perform any acts which would interfere with the retention of title of the Flock Hardware by Flock. Should Customer default on any payment of the Flock Services, Flock may remove Flock Hardware at Flock's discretion. Such removal, if made by Flock, shall not be deemed a waiver of Flock's rights to any damages Flock may sustain as a result of Customer's default and Flock shall have the right to enforce any other legal remedy or right.

Docusign Envelope ID: 3F2B0152-0D33-4555-834A-23D13A85DE12

10.2 **Deployment Plan**. Flock shall advise Customer on the location and positioning of the Flock Hardware for optimal product functionality, as conditions and locations allow. Flock will collaborate with Customer to design the strategic geographic mapping of the location(s) and implementation of Flock Hardware to create a deployment plan ("***Deployment Plan***"). In the event that Flock determines that Flock Hardware will not achieve optimal functionality at a designated location, Flock shall have final discretion to veto a specific location, and will provide alternative options to Customer.

10.3 **Changes to Deployment Plan.** After installation of Flock Hardware, any subsequent requested changes to the Deployment Plan, including, but not limited to, relocating, re-positioning, adjusting of the mounting, removing foliage, replacement, changes to heights of poles will incur a fee according to the reinstall fee schedule located at (https://www.flocksafety.com/reinstall-fee-schedule). Customer will receive prior notice and confirm approval of any such fees.

10.4 **Customer Installation Obligations**. Customer is responsible for any applicable supplementary cost as described in the Customer Implementation Guide, attached hereto as Exhibit C. Customer represents and warrants that it has, or shall lawfully obtain, all necessary right title and authority and hereby authorizes Flock to install the Flock Hardware at the designated locations and to make any necessary inspections or maintenance in connection with such installation.

10.5 **Flock's Obligations**. Installation of any Flock Hardware shall be installed in a professional manner within a commercially reasonable time from the Effective Date of this Agreement. Upon removal of Flock Hardware, Flock shall restore the location to its original condition, ordinary wear and tear excepted. Flock will continue to monitor the performance of Flock Hardware for the length of the Term. Flock may use a subcontractor or third party to perform certain obligations under this Agreement, provided that Flock's use of such subcontractor or third party shall not release Flock from any duty or liability to fulfill Flock's obligations under this Agreement.

11. MISCELLANEOUS

Docusign Envelope ID: 3F2B0152-0D33-4555-834A-23D13A85DE12

11.1 **Compliance with Laws.** Parties shall comply with all applicable local, state and federal laws, regulations, policies and ordinances and their associated record retention schedules, including responding to any subpoena request(s).

11.2 **Severability.** If any provision of this Agreement is found to be unenforceable or invalid, that provision will be limited or eliminated to the minimum extent necessary so that this Agreement will otherwise remain in full force and effect.

11.3 **Assignment.** This Agreement is not assignable, transferable or sublicensable by either Party, without prior consent. Notwithstanding the foregoing, either Party may assign this Agreement, without the other Party's consent, (i) to any parent, subsidiary, or affiliate entity, or (ii) to any purchaser of all or substantially all of such Party's assets or to any successor by way of merger, consolidation or similar transaction.

11.4 **Entire Agreement.** This Agreement, together with the Order Form(s), the reinstall fee schedule (https://www.flocksafety.com/reinstall-fee-schedule), and any attached exhibits are the complete and exclusive statement of the mutual understanding of the Parties and supersedes and cancels all previous or contemporaneous negotiations, discussions or agreements, whether written and oral, communications and other understandings relating to the subject matter of this Agreement. All waivers and modifications must be in a writing signed by both Parties, except as otherwise provided herein. None of Customer's purchase orders, authorizations or similar documents will alter the terms of this Agreement, and any such conflicting terms are expressly rejected. Any mutually agreed upon future purchase order is subject to these legal terms and does not alter the rights and obligations under this Agreement, except that future purchase orders may outline additional products, services, quantities and billing terms to be mutually accepted by Parties. In the event of any conflict of terms found in this Agreement or any other terms and conditions, the terms of this Agreement shall prevail. Customer agrees that Customer's purchase is neither contingent upon the delivery of any future functionality or features nor dependent upon any oral or written comments made by Flock with respect to future functionality or feature.

11.5 **Relationship.** No agency, partnership, joint venture, or employment is created as a result of this Agreement and Parties do not have any authority of any kind to bind each other in any respect whatsoever. Flock shall at all times be and act as an independent contractor to Customer.

11.6 **Governing Law; Venue.** This Agreement shall be governed by the laws of the state in which the Customer is located. The Parties hereto agree that venue would be proper in the

Docusign Envelope ID: 3F2B0152-0D33-4555-834A-23D13A85DE12

chosen courts of the State of which the Customer is located. The Parties agree that the United Nations Convention for the International Sale of Goods is excluded in its entirety from this Agreement.

11.7 **Special Terms.** Flock may offer certain special terms which are indicated in the Order Form and will become part of this Agreement, upon Customer's prior written consent and the mutual execution by authorized representatives ("***Special Terms***"). To the extent that any terms of this Agreement are inconsistent or conflict with the Special Terms, the Special Terms shall control.

11.8 **Publicity.** Upon prior written consent, Flock has the right to reference and use Customer's name and disclose the nature of the Services in business and development and marketing efforts. Nothing contained in this Agreement shall be construed as conferring on any Party, any right to use the other Party's name as an endorsement of product/service.

11.9 **Feedback.** If Customer or Authorized End User provides any suggestions, ideas, enhancement requests, feedback, recommendations or other information relating to the subject matter hereunder, Customer or Authorized End User hereby assigns to Flock all right, title and interest (including intellectual property rights) with respect to or resulting from any of the foregoing.

11.10 **Export.** Customer may not remove or export from the United States or allow the export or re-export of the Flock IP or anything related thereto, or any direct product thereof in violation of any restrictions, laws or regulations of the United States Department of Commerce, the United States Department of Treasury Office of Foreign Assets Control, or any other United States or foreign Customer or authority. As defined in Federal Acquisition Regulation ("FAR"), section 2.101, the Services, the Flock Hardware and Documentation are "commercial items" and according to the Department of Defense Federal Acquisition Regulation ("DFAR") section 252.2277014(a)(1) and are deemed to be "commercial computer software" and "commercial computer software documentation." Flock is compliant with FAR Section 889 and does not contract or do business with, use any equipment, system, or service that uses the enumerated banned Chinese telecommunication companies, equipment or services as a substantial or essential component of any system, or as critical technology as part of any Flock system. Consistent with DFAR section 227.7202 and FAR section 12.212, any use, modification, reproduction, release, performance, display, or disclosure of such commercial software or

Docusign Envelope ID: 3F2B0152-0D33-4555-834A-23D13A85DE12

commercial software documentation by the U.S. Government will be governed solely by the terms of this Agreement and will be prohibited except to the extent expressly permitted by the terms of this Agreement.

11.11 **Headings.** The headings are merely for organization and should not be construed as adding meaning to the Agreement or interpreting the associated sections.

11.12 **Authority.** Each of the below signers of this Agreement represent that they understand this Agreement and have the authority to sign on behalf of and bind the Parties they are representing upon the Effective Date.

11.13 **Conflict.** In the event there is a conflict between this Agreement and any applicable statement of work, or Customer purchase order, this Agreement controls unless explicitly stated otherwise.

11.14 **Notices.** All notices under this Agreement will be in writing and will be deemed to have been duly given when received, if personally delivered; when receipt is electronically confirmed, if transmitted by email; the day after it is sent, if sent for next day delivery by recognized overnight delivery service; and upon receipt to the address listed on the Order Form (or, if different, below), if sent by certified or registered mail, return receipt requested. All notices will be provided to the email or mailing address listed in the Order Form.

11.15 **Non-Appropriation.** Notwithstanding any other provision of this Agreement, all obligations of the Customer under this Agreement which require the expenditure of public funds are conditioned on the availability of said funds appropriated for that purpose. To the extent applicable, Customer shall have the right to terminate this Agreement for non-appropriation with thirty (30) days written notice without penalty or other cost.

.

Docusign Envelope ID: 3F2B0152-0D33-4555-834A-23D13A85DE12

FLOCK NOTICES ADDRESS:

1170 HOWELL MILL ROAD, NW SUITE 210

ATLANTA, GA 30318

ATTN: LEGAL DEPARTMENT

EMAIL: legal@flocksafety.com

Customer NOTICES ADDRESS:

ADDRESS: _____

ATTN: _____

EMAIL: _____

Docusign Envelope ID: 3F2B0152-0D33-4555-834A-23D13A85DE12

EXHIBIT B

INSURANCE

Required Coverage. Flock shall procure and maintain for the duration of this Agreement insurance against claims for injuries to persons or damages to property that may arise from or in connection with the performance of the services under this Agreement and the results of that work by Flock or its agents, representatives, employees or subcontractors. Insurance shall be placed with insurers with a current A. M. Best rating of no less than "A" and "VII". Flock shall obtain and, during the term of this Agreement, shall maintain policies of professional liability (errors and omissions), automobile liability, and general liability insurance for insurable amounts of not less than the limits listed herein. The insurance policies shall provide that the policies shall remain in full force during the life of the Agreement. Flock shall procure and shall maintain during the life of this Agreement Worker's Compensation insurance as required by applicable State law for all Flock employees. For the avoidance of doubt, (i) all required insurance limits by Customer can be met through a combination of primary and excess/umbrella coverage, and (ii) Flock's Cyber and Professional Liability/Errors and Omissions insurance has a shared limit of Five Million Dollars (5,000,000) per incident and in the aggregate.

Types and Amounts Required. Flock shall maintain, at minimum, the following insurance coverage for the duration of this Agreement:

(i) **Commercial General Liability** insurance written on an occurrence basis with minimum limits of One Million Dollars ($1,000,000) per occurrence and Two Million Dollars ($2,000,000) in the aggregate for bodily injury, death, and property damage, including personal injury, contractual liability, independent contractors, broad-form property damage, and product and completed operations coverage;

(ii) **Workers Compensation** insurance in accordance with statutory limits;

(iii) **Professional Liability/Errors and Omissions** insurance with minimum limits of Five Million Dollars ($5,000,000) per occurrence and Five Million Dollars ($5,000,000) in the aggregate;

Docusign Envelope ID: 3F2B0152-0D33-4555-834A-23D13A85DE12

(iv) **Commercial Automobile Liability** insurance with a minimum combined single limit of One Million Dollars ($1,000,000) per occurrence for bodily injury, death, and property coverage, including owned and non-owned and hired automobile coverage; and

(v) **Cyber Liability** insurance written on an occurrence basis with minimum limits of Five Million Dollars ($5,000,000).

Docusign Envelope ID: 3F2B0152-0D33-4555-834A-23D13A85DE12

Customer Implementation Guide

Law Enforcement

flock safety

Docusign Envelope ID: 3F2B0152-0D33-4555-834A-23D13A85DE12

Table of Contents

Implementation Timeline 2

Flock Safety Team 3

Implementation Service briefs: Existing Infrastructure vs Standard vs Advanced 6

- Existing Infrastructure Implementation
- Standard Implementation
- Advanced Implementation

Things to Consider When Selecting Locations 12

Customer Responsibilities: AC-Powered Cams 14

Electrician Handout 15

- Electrician Installation Steps
- FAQs about AC-Powered Flock Cameras

Installation Service Brief Summary 18

Permitting: Pre-Install Questionnaire 19

1. Timeline
2. Right of Way
3. AC Power vs. Solar
4. Traffic Control & Installation Methods
5. Paperwork & Required Forms
6. Contacts

*Fee Schedule 21

Help Center 22

Customer Support 22

Docusign Envelope ID: 3F2B0152-0D33-4555-834A-23D13A85DE12

Implementation Timeline

This timeline provides general guidance and understanding of your installation process. While we typically complete installations 6-8 weeks after locations have been finalized, delays can occur as noted in the timeline below:

REVIEW LOCATIONS

Confirm Camera Locations With Your Sales Representative

FLOCK: Your sales representative will present several viable options for camera locations

CUSTOMER: Review Deployment Plan & approve camera locations

PLEASE NOTE: If Public Works is required to move forward, please obtain approval

FINALIZE LOCATIONS

Prepare For Finalized Camera Locations

FLOCK: Confirm Deployment Plane and signed agreement. Flock will move forward with next steps for locations that don't need permits (minimum 10 locations needed to move forward with partial installation)

CUSTOMER: Prepare the below items, as needed

- **If permits are required, begin application process**
- **If camera will be AC-powered, hire an electrician/street department**

STEP 1

Conduct On-site Survey & Place Flags

FLOCK: Flock technician conducts site survey to (1) evaluate/reconfirm solar or power access, (2) check line of sight to the road, and (3) evaluate/reconfirm cellular service in the area. When the technician deems the locations suitable, s/he will place a white flag at each spot

PLEASE NOTE: If the initially determined locations don't meet Flock standards, we will evaluate a new location, obtain customer approval, and redo a site survey. This may push timeline for installation

STEP 2

Call 811

FLOCK: Flock Safety will coordinate with Call 811 to mark each camera location for underground utilities within a 10-foot radius

PLEASE NOTE: Call 811 is a government service, so turnaround times may vary and is outside of Flock control

STEP 3

Schedule Installation

FLOCK: Flock will (1) ship any site specific material that the technician does not have locally (2) schedule the installation date

STEP 4

Install & Validate Cameras

FLOCK: After installation, your Onboarding Specialist will confirm that cameras are capturing footage well and functioning properly. They will then give you full access to the system along with helpful training resources

ONGOING – AS NEEDED

Finalize Any Installation Needs

FLOCK: While we typically complete installations within 4 weeks of finalizing locations, delays may occur due to external factors. In these instances, we will continue to work through this process until your cameras are fully installed and operational

Docusign Envelope ID: 3F2B0152-0D33-4555-834A-23D13A85DE12

Flock Safety Team

Implementation Team	How They Will Support You
 Project Manager	Your **Project Manager** is your **primary contact during camera installation.** Your project manager will guide you through the entire installation process, keeping you apprised of all implementation updates as well as answering any questions you have during this time. They will ensure that all the cameras are on the ground and operating for at least 48 hours before transitioning you to your Customer Success Manager.
 Field Operations Team	• The Field Operations team is responsible for the physical installation and maintenance of cameras and associated equipment provided by Flock. This includes a large team of technicians, schedulers, and many others involved in ensuring the delivery of the product. • They take the technical plan you finalized with Product Implementation and work closely with other teams at Flock to make sure that the cameras are installed quickly and safely and in a way that maximizes the opportunity to solve crime at a specific location. • ***Note*:** For **all Installation questions or concerns**, please always direct them to your **Customer Success Manager** and not the technician.

Docusign Envelope ID: 3F2B0152-0D33-4555-834A-23D13A85DE12

Relationship Team	How They Will Support You
 Customer Success Manager	Your Customer Success Manager is your strategic partner for your lifetime as a Flock customer. While the cameras are getting installed, your CSM will help get your account set up and get all key users trained on the system. Post-Camera-Installation, your CSM will be your go-to for most account-related needs: You should reach out to them to: • Set up Account Training • Understand benefits of features • Learning best practices for getting relevant data • Identifying opportunities to expand the security network in your area • Provide feedback on your partnership with Flock
 Flock Safety Support	The Flock Safety Support team is committed to answering all your day-to-day questions as quickly as possible. **To get in touch with support**, simply email **support@flocksafety.com or call 866-901-1781 Mon-Fri 8am-8pm EST.** Support can help you: • Request camera maintenance • Troubleshoot online platform • Contract / Billing questions • Update account information • Camera Sharing questions • Quick “How to” questions in your Flock Account

Docusign Envelope ID: 3F2B0152-0D33-4555-834A-23D13A85DE12

Outside Party	When They May Be Involved
Electrician/Street Department	If the Flock cameras need to be AC powered, you (customer) are responsible for providing an electrician to ensure power connectivity
Public Works (LE)	To weigh in on the use of public Rights of Way or property
Department of Transportation (DOT), City, or County agencies	If installation in your area requires permitting

PLEASE NOTE: On some occasions, third parties outside of Flock Safety may be (or need to be) involved in your implementation.

Docusign Envelope ID: 3F2B0152-0D33-4555-834A-23D13A85DE12

Implementation Service Briefs: Existing Infrastructure vs Standard vs Advanced

	Existing Infrastructure Install	Standard Install	Advanced Install
Pole	None	Flock	NCHRP 350 / MASH
Timeline	Short	Medium	Longest
Cost	Lowest	Mid	Highest

Existing Infrastructure Implementation

COST: $150 per camera (one time cost)

Included In Scope:

Once designated locations are approved by the customer, as part of the **Existing Infrastructure Implementation Service** Flock will perform the following:

- An in-person site survey to confirm the installation feasibility of a location (location assessment, solar assessment, visibility review, etc.)
  - Cameras need sufficient power. Since a solar panel is required per camera, it can prevent adequate solar power if two cameras and two solar panels are on a single pole (blocking visibility). Therefore if relying on solar power, only one camera can be installed per pole.
- Confirm that a location is safe for work by following State utility locating procedures.
- Each installation may include the following:
  - Installation of camera and solar panel or AC adapter box on a suitable existing pole

Docusign Envelope ID: 3F2B0152-0D33-4555-834A-23D13A85DE12

        - Types of existing infrastructure such as existing utility, light, and traffic signal poles.
        - Pole no higher than 8'-12' (approval at Flock Safety's discretion)
        - Flock will provide and mount an AC adapter unit that a qualified electrician can connect to AC power following our **electrical wiring requirements.** Flock is unable to make any AC connections or boreholes in any material other than dirt, grass, loose gravel (or other non-diggable material). Electrical work requiring a licensed electrician and associated costs, not included in the scope.
    - Access requiring up to a 14' using an A-frame ladder
    - Standard MUTCD traffic control procedures performed by a Flock technician
- Obtain a business license to operate in the city and state of camera location

Out Of Scope:

By default, Flock does **not** include the following as part of the **Existing Infrastructure Implementation Service** but can provide a quote for sourcing at an additional cost:

- Mounting on mast arms (always require bucket truck and traffic control)
- Call 811 'Call-before-you-Dig' system
- Installation of any poles including but not limited to
    - Standard, 12' above grade **Flock breakaway pole**
    - NCHRP 350 or MASH approved pole (as may be required for locations in DOT right of way)
- A Bucket Truck for accessing horizontal/cross-beams and/or height above 14'
- Special equipment rentals for site access
- Site-specific engineered traffic plans
- Third-party provided traffic control
- State or city-specific specialty contractor licenses or unique attachment/ connection requirements
- Custom engineered drawings
- Electrical work requires a licensed electrician.

Docusign Envelope ID: 3F2B0152-0D33-4555-834A-23D13A85DE12

  - Flock will provide and mount an AC adapter that a qualified electrician can connect to AC power but cannot make any AC connections or boreholes in any material other than dirt, grass, loose gravel (or other non-diggable material).
- Concrete cutting
- Private utility search for privately owned items not included in standard 811 procedures (communication, networking, sprinklers, etc.)
- Upgrades to power sources to ready them for Flock power (additional fuses, switches, breakers, etc.)
- Any fees or costs associated with filing for required city, county, or state permits
- Licensing or attachment agreements with asset / infrastructure owners
- Utility contracts and billing
- Customer requested relocations (see fee schedule)

Standard Implementation

COST: $650 per camera (one time cost)

Included In Scope:

Once designated locations are approved by the customer, as part of the **Standard Implementation Service** Flock will perform the following:

- An in-person site survey to confirm the installation feasibility of a location (location assessment, solar assessment, visibility review, etc.)
- Confirm that a location is safe for work by following state utility locating procedures. Work with local utilities to prevent service interruptions during the installation
  - Engage 811 'Call-before-you-Dig' system to receive legal dig date
  - Apply approved markings Coordinate with 811 regarding any necessary high-risk dig clearances or required vendor meets
- Each installation may include the following:
  - Installation of camera and solar panel with **standard, 12' above grade Flock breakaway pole**

Docusign Envelope ID: 3F2B0152-0D33-4555-834A-23D13A85DE12

- Installation of camera and AC adapter that a qualified electrician can connect to AC power on a suitable existing pole, no higher than 8-12' (approval at Flock Safety's discretion)
  - Flock will provide and mount an AC adapter that a qualified electrician can connect to AC power following our **electrical wiring requirements**. Flock is unable to make any AC connections or boreholes in any material other than dirt, grass, loose gravel (or other non-diggable material). Electrical work requiring a licensed electrician and associated costs, not included in the scope.
- Access requiring up to a 14' A-frame ladder
- Standard MUTCD traffic control procedures performed by a Flock technician

- Obtain a business license to operate in the City and State of camera location

Out Of Scope:

By default, Flock does **not** include the following as part of the Standard Implementation Service but can provide a quote for sourcing at an additional cost:

- Use and/or mounting to existing infrastructure.
- NCHRP 350 or MASH approved pole (as may be required for locations in DOT right of way)
- A Bucket Truck for accessing horizontal/cross-beams and/or height above 14'
- Special equipment rentals for site access
- Site-specific engineered traffic plans
- Third-party provided traffic control
- State or city-specific specialty contractor licenses
- Custom engineered drawings
- Electrical work requires a licensed electrician.
  - Flock will provide and mount an AC adapter that a qualified electrician can connect to AC power but cannot make any AC connections or boreholes in any material other than dirt, grass, loose gravel (or other non-diggable material).
- Concrete cutting
- Private utility search for privately owned items not included in standard 811 procedures (communication, networking, sprinklers, etc.)

Docusign Envelope ID: 3F2B0152-0D33-4555-834A-23D13A85DE12

- Upgrades to power sources to ready them for Flock power (additional fuses, switches, breakers, etc.)
- Any fees or costs associated with filing for required city, county, or state permits
- Licensing or attachment agreements with asset / infrastructure owners
- Utility contracts and billing
- Customer requested relocations (see fee schedule)

Advanced Implementation

COST: $1,900 per camera (one time cost)

Included In Scope:

Once Designated Locations are confirmed, as part of the **Advanced Implementation Service**, Flock will perform the following:

- An in-person site survey to confirm the installation feasibility of a location (location assessment, solar assessment, visibility review, etc.)
- Confirm that a location is safe for work by following State utility locating procedures. Work with local utilities to prevent service interruptions during the installation
  - Engage 811 'Call-before-you-Dig' system to receive legal dig date
  - Apply approved markings Coordinate with 811 regarding any necessary high-risk dig clearances or required vendor meets
- Each installation may include the following:
  - Installation of camera and solar panel on a suitable **NCHRP 350 or MASH** approved pole.
  - Installation of camera and AC adapter that a qualified electrician can connect to AC power.
    - Flock will provide and mount an AC adapter that a qualified electrician can connect to AC power following our electrical wiring requirements. Flock cannot make any AC connections or boreholes in any material other than dirt, grass, loose gravel (or other non-diggable material).

Docusign Envelope ID: 3F2B0152-0D33-4555-834A-23D13A85DE12

Electrical work requiring a licensed electrician and associated costs, not included in the scope.

- Access requiring up to a 14' A-frame ladder
- Standard MUTCD traffic control procedures performed by a Flock technician

- Obtain a business license to operate in the City and State of camera location

Out Of Scope:

By default, Flock does not include the following as part of the **Advanced Implementation Service** but can optionally provide a quote for sourcing (additional cost):

- Installation on **Standard, 12' above grade Flock breakaway pole** or existing infrastructure.
- A Bucket Truck for accessing horizontal/cross-beams and/or height above 14'
- Special equipment rentals for site access
- Site-specific engineered traffic plans
- Third-party provided traffic control
- State or City-specific specialty contractor licenses
- Custom engineered drawings
- Electrical work requires a licensed electrician. Flock will provide and mount an AC adapter that a qualified electrician can connect to AC power but cannot make any AC connections or boreholes in any material other than dirt, grass, loose gravel (or other non-diggable material).
- Concrete cutting
- Private utility search for privately owned items not included in standard 811 procedures (communication, networking, sprinklers, etc.)
- Upgrades to power sources to ready them for Flock power (additional fuses, switches, breakers, etc.)
- Fees or costs associated with filing for required City, County, or State permits

Docusign Envelope ID: 3F2B0152-0D33-4555-834A-23D13A85DE12

Things to Consider When Selecting Locations

Falcon Cameras

- Use Cases
  - Flock LPRs are designed to capture images of rear license plates aimed in the direction of traffic.
  - Flock LPRs are not designed to capture pedestrians, sidewalks, dumpsters, gates, other areas of non-vehicle traffic, intersections.
- Placement
  - They capture vehicles driving away from an intersection.
  - They cannot point into the middle of an intersection.
  - They should be placed after the intersection to prevent stop and go motion activation or “stop and go” traffic.
- Mounting
  - They can be mounted on existing utility, light, traffic signal poles, or 12 foot Flock poles.*
  - They should be mounted one per pole.** If using AC power, they can be mounted 2 per pole.
- They can be powered with solar panels or direct wire-in AC Power (no outlets).***
- They will require adequate cellular service using AT&T or T-Mobile to be able to process & send images.

* Permitting (or permission from pole owner) may be required to use existing infrastructure or install in specific areas, depending on local regulations & policies.

** Cameras need sufficient power. Since a solar panel is required per camera, it can prevent adequate solar power if two cameras and two solar panels are on a single pole (blocking visibility). Therefore if relying on solar power, only one camera can be installed per pole.

*** Flock does not provide Electrical services. Once installed, the agency or community must work with an electrician to wire the cameras. Electrician services should be completed within two days of installation to prevent the camera from dying.

Docusign Envelope ID: 3F2B0152-0D33-4555-834A-23D13A85DE12

Solar Panels

Solar panels need unobstructed southern-facing views.

Pole

If a location requires a "DOT Pole" (i.e., Advanced Pole, **not** Flock standard pole), the implementation cost will be $5,000/camera.

Docusign Envelope ID: 3F2B0152-0D33-4555-834A-23D13A85DE12

Customer Responsibilities: AC-Powered Cams

If the Flock cameras need to be AC-powered, the **customer is responsible** for acquiring an electrician and ensuring they connect the camera to power. **See steps 2 and 6 below**.

How to Get Started with a Powered Install

1. Create a Deployment Plan

Work with us to select the best location(s) for Flock Safety cameras and power sources

2. Acquire an Electric Quote

120v

Contact an electrician to receive a quote to run 120volt AC power to the camera

3. Sign Flock Safety Agreement

Sign the Flock Safety purchase order to begin the installation of cameras

4. Conduct Site Survey

Flock will mark camera locations, locate underground utilities and mark if present

5. Install Camera

Flock will install the camera and AC power kit at the specified camera location

6. Connect Camera to Power

Notify the electrician that the camera is ready for the power connection installation

Docusign Envelope ID: 3F2B0152-0D33-4555-834A-23D13A85DE12

Electrician Handout

Electrician Installation Steps

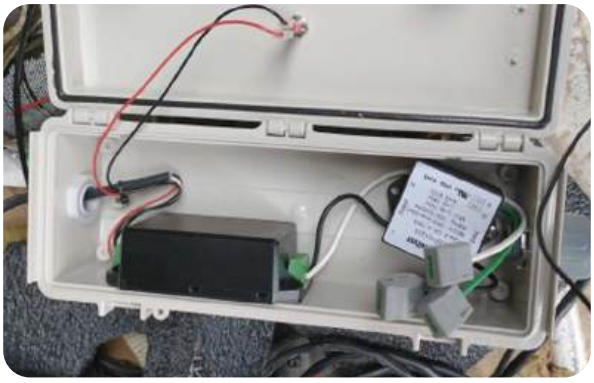

1. Run AC cable and conduit to the box according to NEC Article 300 and any applicable local codes. The gland accepts ½" conduit.
2. Open the box using hinges.
3. Connect AC Mains per wiring diagram below:
   a. Connect AC Neutral wire to the Surge Protector white Neutral wire using the open position on the lever nut.
   b. Connect AC Line wire to the Surge Protector black Line wire using the open position on the lever nut.
   c. Connect AC Ground wire to the Surge Protector green ground wire using the open position on the lever nut.
4. Verify that both the RED LED is lit on the front of the box
5. Close box and zip tie the box shut with the provided zip tie
6. While still on-site, call Flock, who will remotely verify that power is working correctly:

   Southeast Region - (678) 562-8766
   West-Region - (804) 607-9213
   Central & NE Region - (470) 868-4027

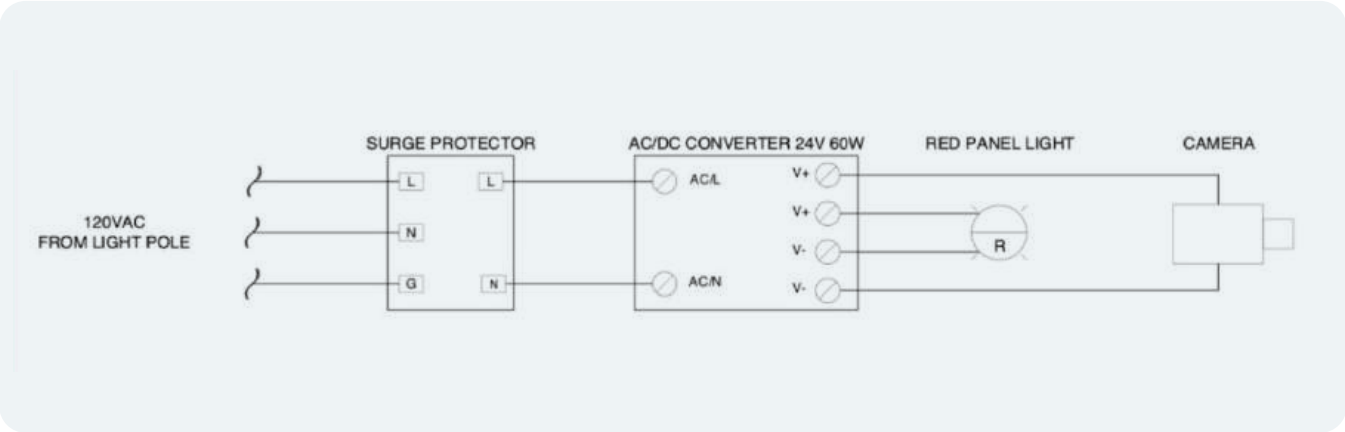

Docusign Envelope ID: 3F2B0152-0D33-4555-834A-23D13A85DE12

FAQs about AC-Powered Flock Cameras

What voltage is supported?
The AC kit is designed to work with 120VAC Infrastructure by default. A 240VAC version is available on request.

How much power does this consume?
Peak current draw is 1.5 A at 120VAC. The average power draw is roughly 30W in high traffic conditions but maybe lower when fewer vehicles are present.

Who is responsible for contracting the electrician?
The customer is responsible for contracting an electrician. We can help answer questions, but the customer is responsible for identifying and contracting an electrician.

Who is responsible for maintenance?
Flock will handle all maintenance related to Flock's camera and power equipment. However, any problems with the electrical supply are the customer's responsibility. The AC junction box has two lights to indicate the presence of power and make it easy for quick diagnosis if there is a problem related to the AC power source.

- If the camera indicates to Flock that there is a power supply problem, Flock will notify the customer and request that the customer verifies the lights on the AC junction box. If the AC Source light is illuminated, Flock will send a technician to investigate. If the AC source light is not illuminated, the customer should check any GFCI's or breakers in the supply circuit or call the electrician who installed the power supply.

How much does it cost?
Work required to bring AC power to each location will be different, so exact pricing is unavailable. Primary cost drivers include arrow boards and the distance from the camera location to the AC power source.

What information do I need to provide my electrician?
The Flock deployment plan and these work instructions should be sufficient to secure a quote. It will be helpful if you know the location of the existing power infrastructure before creating the deployment plan.

Docusign Envelope ID: 3F2B0152-0D33-4555-834A-23D13A85DE12

Can you plug it into my existing power outlet? The Flock AC power adapter does not use a standard outlet plug but must be directly wired into the power mains. While using outlet plugs may be convenient, they can easily be unplugged, presenting a tampering risk to this critical safety infrastructure.
The electrician can route power directly to the camera with a direct wire-in connection if an outlet is close to the camera.

How long does this process typically take?
The installation process typically takes 6-8 weeks. To accelerate the process, be sure to have the electrician perform his work shortly after the Flock technician finishes installing the camera.

What kind of electrician should I look for?
Any licensed electrician should perform this work, though we have found that those who advertise working with landscape lighting are most suited for this work.

What happens if the electrician damages the equipment?
The customer is responsible for contracting the electrician. Any liability associated with this work would be assumed by the customer. If any future work is required at this site due to the electrical infrastructure or the work performed by the electrician would be the responsibility of the customer.

When should the electrician perform his work?
Once Flock installs the camera, you will receive an email alert letting you know that this has been completed. After this, you will need to schedule the electrician to route power to the pole.

What if my electrician has questions about Flock's AC Kit?
You should share the **AC-Power Kit Details** packet with the electrician if they have questions.

What if the AC power is on a timer?
Sometimes the AC power will be on a timer (like used for exterior lighting). Flock requires that the AC power provided to the camera be constant. The source that the electrician uses must not be on a timing circuit.

Docusign Envelope ID: 3F2B0152-0D33-4555-834A-23D13A85DE12

Installation Service Brief Summary

Below outlines the statement of work for the Flock Camera Installation:

What Is Covered By Flock	What Is NOT Covered By Flock	Special Note
Flock Cameras & Online Platform	Traffic Control And Any Associated Costs	
Mounting Poles	*DOT Approved Pole Cost Electrician & Ongoing Electrical Costs	
AC Power Kit (As Needed)	Engineering Drawings	
Solar Panels (As Needed)	Relocation Fees	*Excluding Changes During Initial Installation*
Site Surveys And Call 811 Scheduling	Contractor Licensing Fees	
Installation Labor Costs	Permit Application Processing Fees	
Customer Support / Training	Specialist Mounting Equipment	*Including, But Not Limited To, **MASH Poles Or Adapters*
Cellular Data Coverage	Bucket Trucks	
Maintenance Fees *(Review Fees Sheet For More Details)*	Loss, Theft, Damage To Flock Equipment	
Data Storage For 30 Days	Camera Downtime Due To Power Outage	*Only Applicable For AC-Powered Cameras*
	***Field Technician Maintenance For **Falcon™ Flex**	

*If a location requires a "DOT pole" (i.e., not our standard), the implementation cost will be $5,000/camera; This cost is applicable for installations in GA, IL, SC, TN, and CA.

**MASH poles: Manual for Assessing Safety Hardware (MASH) presents uniform guidelines for crash testing permanent and temporary highway safety features and recommends evaluation criteria to assess test results

***If a camera is lost, stolen, or damaged, a replacement device can be purchased at a discounted price of $800

Docusign Envelope ID: 3F2B0152-0D33-4555-834A-23D13A85DE12

Permitting: Pre-Install Questionnaire

1. **Timeline**
   - In Flock Safety's experience, in-depth permitting requirements can **add 2+ months to the installation timeline.**
   - The SLA for permit document submission is within 15 days from contract signature date (contract Closed-Won)

2. **Right of Way**
   - Will any Flock Safety cameras be installed on the city, state, or power company-owned poles or in the city, county, or state Right of Way (RoW)?
     - What is the RoW buffer?
     - Will additional permits or written permission be required from third-party entities (such as DOT, power companies, public works, etc.)?
   - Will any cameras be installed on city-owned traffic signal poles (vertical mass)?
     - If yes, please provide heights/photos to determine if a bucket truck is needed for the installation.
       - Note: A bucket truck is required if the height exceeds 15 feet tall.

3. **AC Power vs. Solar**
   - If AC powered, is there a 120V power source available, and is there access to an electrician who can connect the existing wire to the Flock Safety powered installation kit?
   - If solar-powered, consider the size of the solar panel and potential to impact the visibility of DOT signs/signals:
     - Single Panel: 21.25" x 14" x 2" (Length x Width x Depth)
     - Double Panel: 21.25" x 28" x 2" (LxWxD)

4. **Traffic Control & Installation Methods**
   - **If a bucket truck is required**, this typically necessitates an entire lane to be blocked in the direction of travel. **Can you provide a patrol car escort, or will full traffic control be required?***

PLEASE NOTE: If traffic control is required, you may incur additional costs due to city/state requirements; Fees will be determined by quotes received.

Docusign Envelope ID: 3F2B0152-0D33-4555-834A-23D13A85DE12

- **If full traffic control is required (cones, arrow boards, etc.):**
  - Will standard plans suffice, or are custom plans needed? Custom plans can double the cost, while standard plans can be pulled from the Manual of Uniform Traffic Control Devices **(MUTCD)**.
  - Will a non-sealed copy of the traffic plan suffice? Or does the traffic plan need to be sealed and/or submitted by a professional engineer?
  - Are there state-specific special versions/variances that must be followed?
- **If a bucket truck is *not* required**, the shoulder or sidewalk should suffice and enable Flock Safety to proceed without traffic control systems in place.
  - Note: In some states (i.e., arrow boards), sidewalks may require signage. If signage is mandatory, Will your Public Works department be able to assist?

5. **Paperwork & Required Forms**
   - Flock Safety will need copies of paperwork to complete before proceeding (ex., business license applications, encroachment permit applications). We can save critical time by gathering these documents upfront. We appreciate your assistance in procuring these.

6. **Contacts**
   - If Flock Safety needs to interface directly with the departments, please share the contact information of the following departments:
     - Permitting
     - Public Works
     - Traffic Department

Docusign Envelope ID: 3F2B0152-0D33-4555-834A-23D13A85DE12

*Fee Schedule

After a deployment plan with Designated Locations and equipment has been agreed upon by both Flock and the Customer, any subsequent changes to the deployment plan ("Reinstalls") driven by a Customer's request will incur a fee per the table below.

What Services Incur Fees:

- Requested relocations post-approval by customer
- Relocations due to poor performance will be the responsibility of Flock
  - If a customer requests a location against the advisement of Flock, performance issues and any requested relocations will be the responsibility of the customer.
- Per the contract and absent a defect, in the event that Flock Hardware is lost, stolen, or damaged, Customer may request that Flock replace the Flock Hardware at a fee according to the then-current Reinstall policy **https://www.flocksafety.com/reinstall-fee-schedule**
- Misc billables for out of scope items for each implementation

All fees are per reinstall or required visit (in the case that a reinstall is attempted but not completed) and include labor and materials. If you have any questions, please email **support@flocksafety.com**.

Docusign Envelope ID: 3F2B0152-0D33-4555-834A-23D13A85DE12

Help Center

Our Help Center is filled with many resources to help you navigate through the online platform. Below you will find some common questions and their relevant help article:

How do I search camera footage?

How do I add a user?

How do I add a vehicle to my own Hot List?

How do I enable browser notifications for Hot List alerts?

How do I get text alerts for Hot List?

How do I request camera access from other nearby agencies?

Help Center

How do I use the National Lookup to search for a plate?
(National Lookup - network of law enforcement agencies that have opted to allow their network of Flock cameras to be used for searches)

How do I reset my / another user's password?

Customer Support

You can reach our customer support team anytime by emailing **support@flocksafety.com**. They can help answer any "How-To" questions you may have.